FLEXSON E100WM

ACCESSORIES FOR SONOS

A	B	C
x4	x4	x3

Included (per wall mount)
Inclus (Par support mural)
Inbegriffen (Pro Wandhalterung)
Incluido (Por montaje en pared)

EN Also required
FR Également requis
DE Ebenfalls benötigt
ES También se requiere

7mm (9/32in)

Pozi-drive

1

EN Brick / Masonry
FR Brique / Maçonnerie
DE Ziegel / Mauerwerk
ES Ladrillo / Mampostería

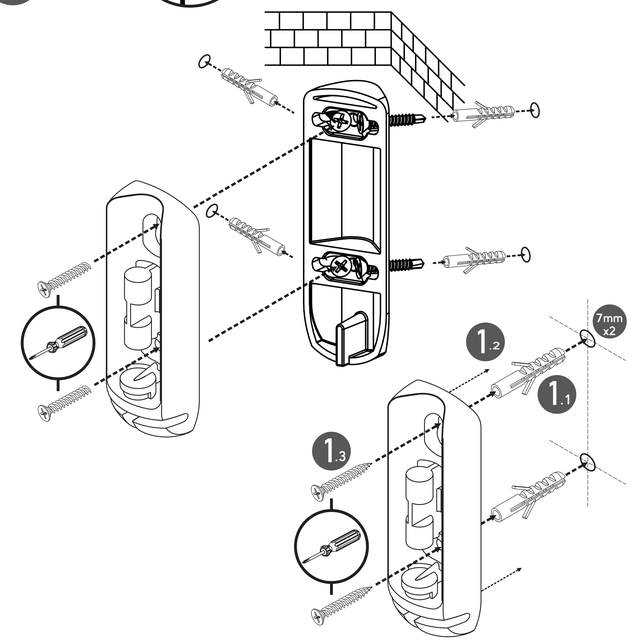

1

EN Wood / Studwork
FR Bois
DE Holz
ES Madera

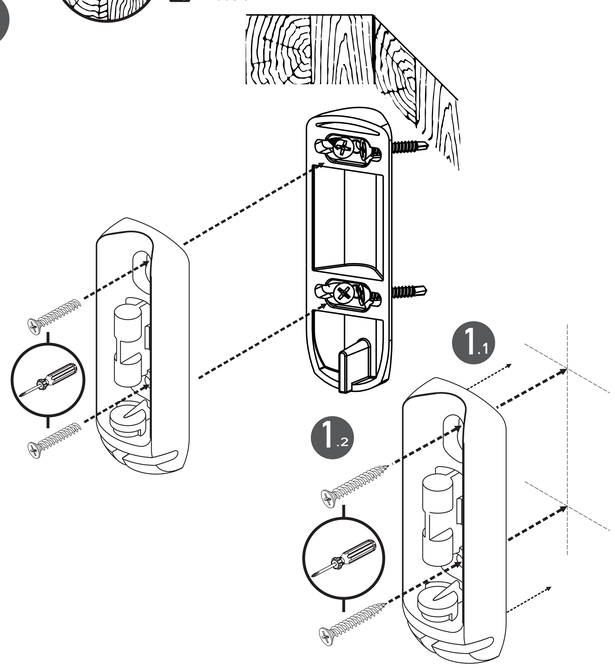

2

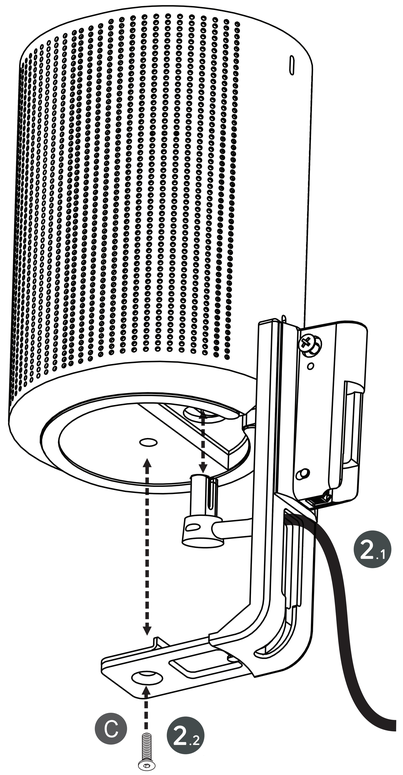

9

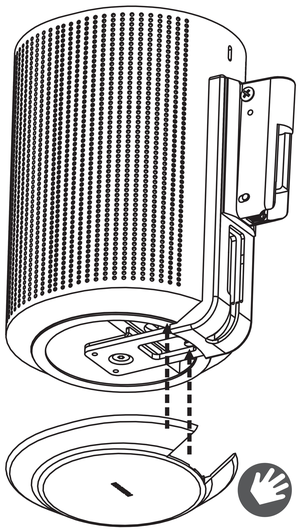

4

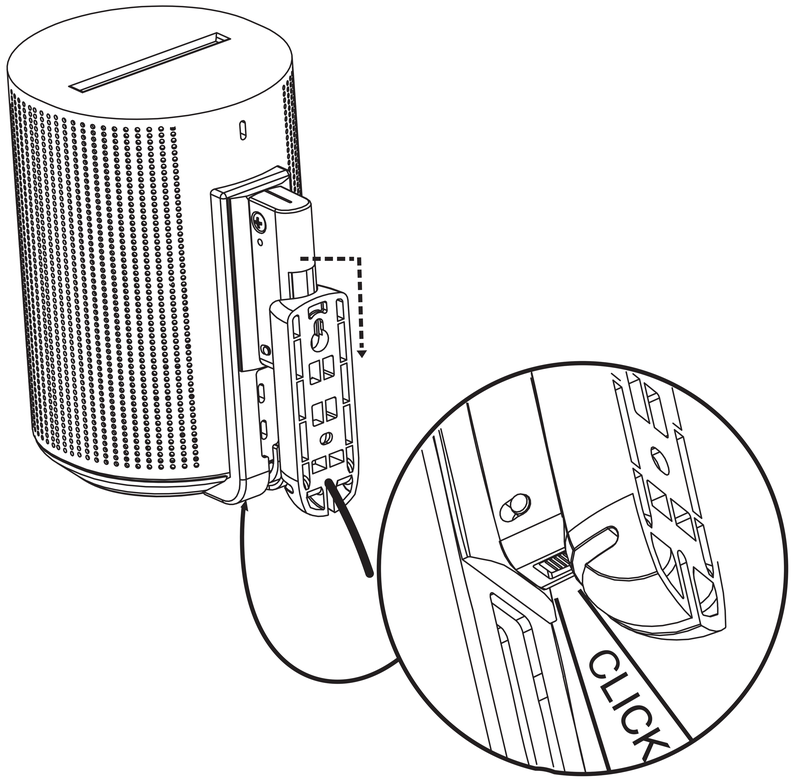

EN **Inverted Speaker mounting**
FR **Fixation invertie de l'enceinte**
DE **Umgedrehte Lautsprechermontage**
ES **Montaje de altavoz invertido**

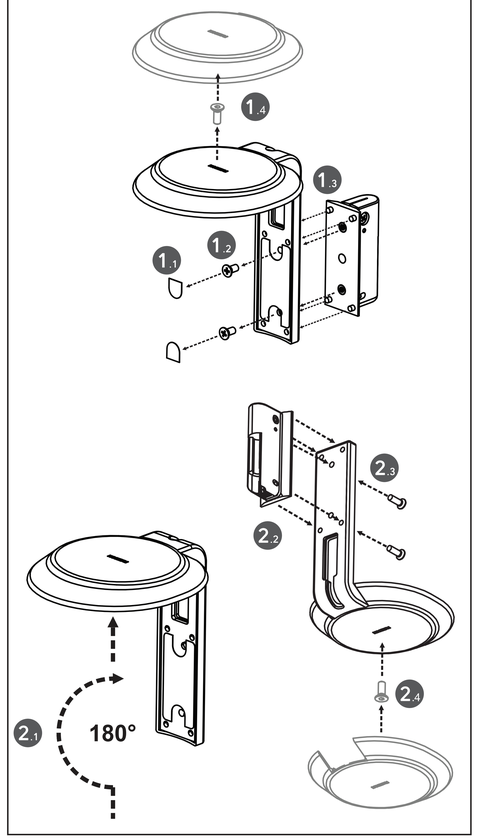

5

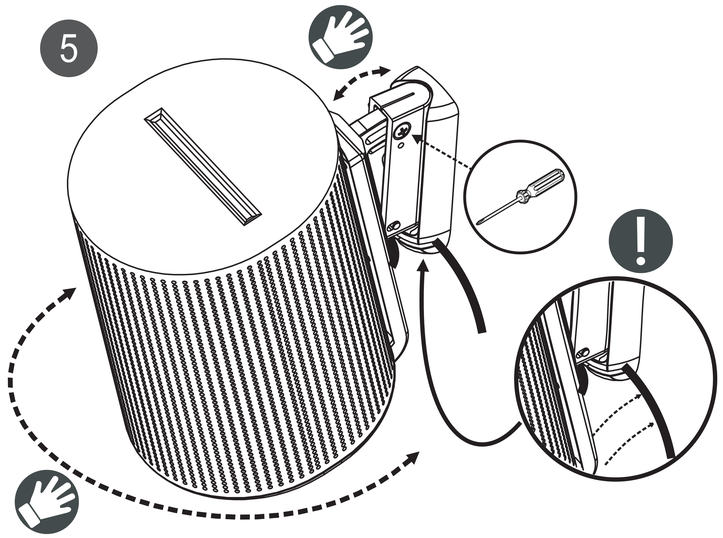

A	M4 Plastic expanal screw
B	M4 x 45mm Countersunk Head Selftapping Pozi-drive
C	M5 x 12mm Countersunk Head Hex-drive

ADDRESS UK: HEA Distribution Ltd. 75 Westow Hill, London. SE19 1TX. United Kingdom
ADDRESS EU: HEA EURP BV. Kroonwiel 2, 6003BT Weert. Netherlands
EMAIL: support@flexson.com

Questions or need support?

Contact us at support@flexson.com for product or installation assistance.